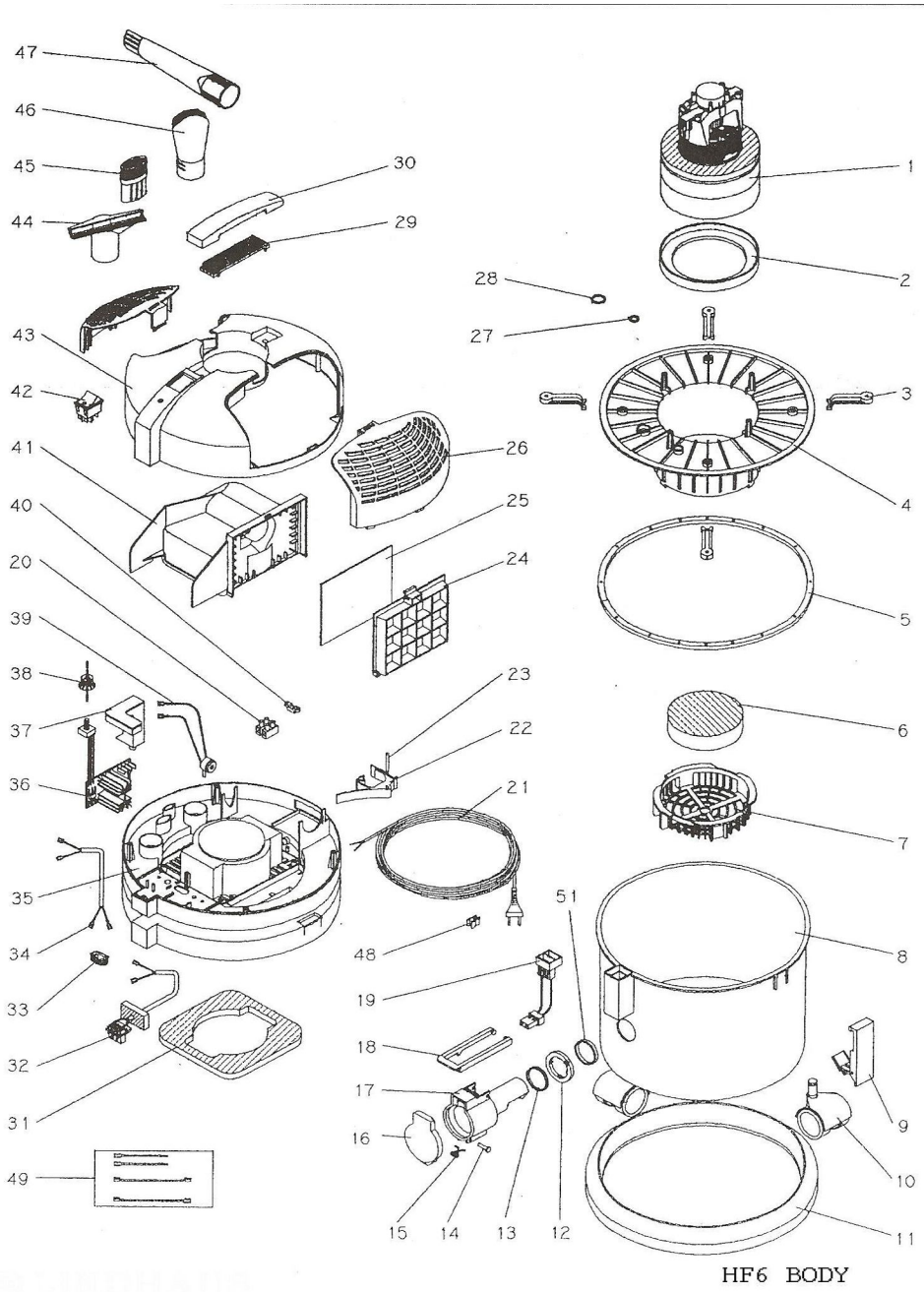
47
46
45
44
30
29
43
42
41
40
20
39
38
37
36
35
34
33
32
31
49
28
27
26
25
24
23
22
21
48
51
19
18
17
16
15
14
13
12
1
2
3
4
5
6
7
8
9
10
11

HF6 BODY

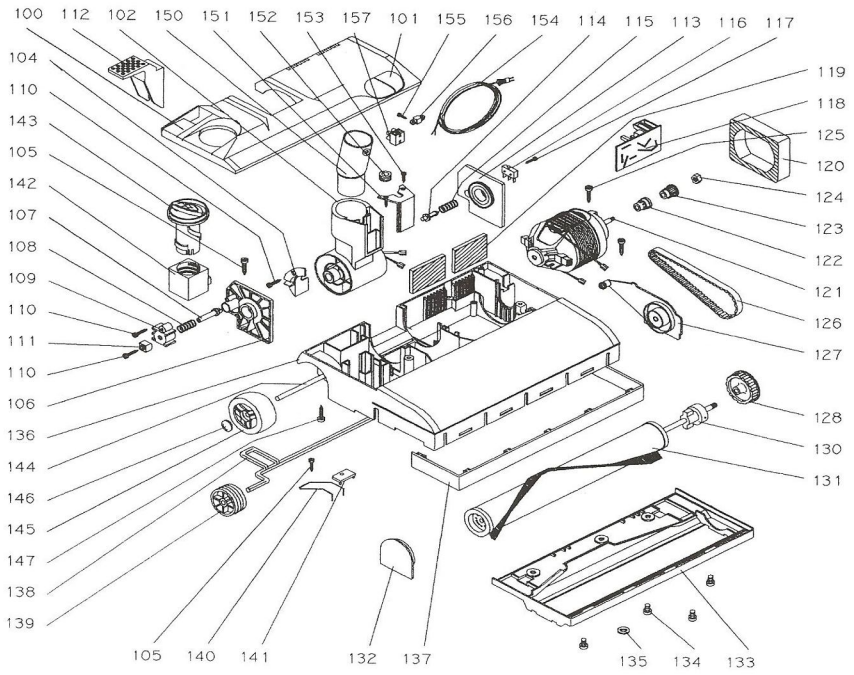

HF6 12"
POWER NOZZLE
(NON DRY CLEANING)

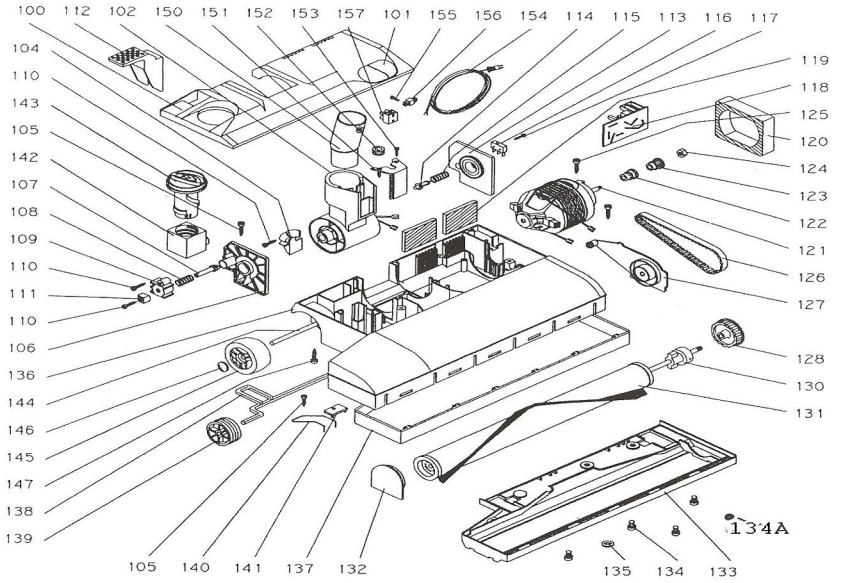

HF6 14"
POWER NOZZLE
(NON DRY CLEANING)

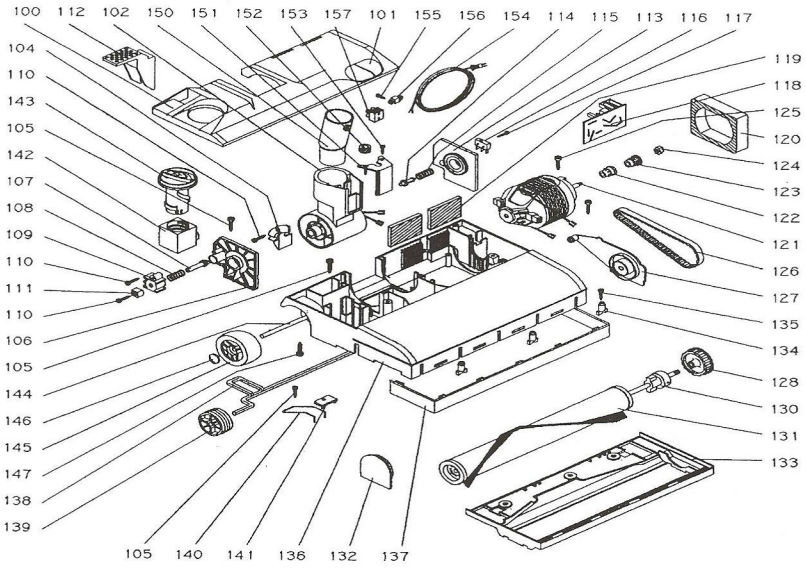

HF6 12" NOZZLE
WITH DRY CLEANING
SYSTEM

LINDHAUS USA **Spare Parts List**
P.O. BOX 159 **Suction Body**
SAVAGE, MN 55378 **HF6 Canister Vacuum V.120/60**

MAP NO.	PART NO.	DESCRIPTION
HF	083760000	HOSE, 10', HF6 POWER KIT
HF	084450081	HOSE, NON-ELECTRIC, CRUSHPROOF
HF 01	050480080	VACUUM MOTOR 120/60 W. 750
HF	011780315	GASKET (TOP OF MOTOR)
HF 02	011900307	VACUUM MOTOR GASKET
HF 03	003520325	MOTOR CLAMP
HF 04	003280325	MOTOR SUPPORT
HF 05	011730315	GASKET
HF 06	012240016	FILTER
HF 07	004020101	FILTER HOUSING
HF 08	003270201	BAG HOUSING GREY
HF 09	083570181	SIDE LATCH
HF 10	030690000	WHEEL SET OF 4
HF 11	003650100	GASKET BUMPER
HF 12	003660105	CLUTCH RING
HF 13	011810307	O-RING
HF 14	003810105	PIN
HF 15	011750009	SPRING
HF 16	084820105	COLLAR COVER
HF 17	003470101	CLUTCH
HF 18	003670105	COLLAR BLOCKING BRIDGE
HF 19	083590080	LOWER CONNECTION KIT
HF 20	021680400	TERMINAL BLOCK 16A
HF 21	021950320	CORD 2x17 THIN, 2 PRONG, 2 WIRE
HF 22	003590104	WAND CLIP
HF 23	011890009	CLIP PIN
HF 24	003360100	EXHAUST GRILL
HF 25	085350081	MICROFILTER 12 PACK
HF 26	003580201	COVER GRILL GREY
HF 27	010260307	O-RING
HF 28	011910307	O-RING
HF 29	003570000	LOWER HANDLE
HF 30	003560201	HANDLE GREY
HF 30	003562601	HANDLE BLUE
HF 31	011690016	GASKET FILTER
HF 32	083600080	UPPER CONNECTION KIT WITH GASKET
HF 33	003600000	STRAIN RELIEF
HF 34	021790320	VACUUM MOTOR CORD
HF 35	003430233	INNER HOUSING LIGHT GREY
HF 36	021660000	CIRCUIT BOARD
HF 37	083610300	AERATOR
HF 38	003490101	ADJUSTING KNOB

HF 39	021840000	VACUUM SENSOR
HF 40	000070305	CORD CLAMP
HF 41	083560281	CONVEYOR
HF 42	021670000	MAIN SWITCH
HF 43	003540201	COVER GREY
HF 43	003542501	COVER RED
HF 44	030820300	UPHOLSTERY TOOL WITH CENTER STRIP
HF 45	030660100	RADIATOR BRUSH, SMALL
HF 46	031460310	DUST BRUSH WITH SWIVEL, NATURAL BRISTLE
HF 47	003420304	TELESCOPIC CREVICE TOOL
HF 49	083580080	WIRE KIT
HF 51	003700100	RING
	012940013	TELESCOPIC METAL TUBE GREY
	011850013	TUBE WITH AIR CONTROL
	001090304	CORD CLIP (CORD TO WAND)
	022300000	CARBON BRUSH, BRUSH MOTOR, SET OF TWO
	030670019	HF6 BAGS (6 BAGS + 2 MICROFILTERS)
	030720100	HEPA FILTER
	030650000	CARBON ACTIVE FILTER
	083540100	BLOWER PORT

LINDHAUS USA
P.O. BOX 159
SAVAGE, MN 55378

Spare Parts List
HF6 Power Nozzle 12 & 14"
HF6 Eco Spreader - 14"

MAP NO.	PART NO.	DESCRIPTION
PB 99	085150081	THROAT COVER, w/ SPRING,FELT STRIP
PB 99A	011000017	THROAT COVER FELT STRIP ONLY
PB 100	083960281	MOTOR COVER LIGHT GREY
PB 100	083960181	MOTOR COVER DARK GREY
PB 101	083950081	LENS SET RED AND GREEN
PB 102	083530380	JOINT COMPLETE HF6
PB 104	002280305	JOINT PIN SLIDE
PB 105	085590009	SCREW 3.9 X 13 PACK OF 20
PB 106	080430381	RIGHT CONNECTOR SUPPORT
PB 107	000840036	PLUNGER
PB 108	010390009	SPRING, DETENTE
PB 109	000650036	BUSHING
PB 110	085610009	SCREW 2.9 X 16 PACK OF 20
PB 111	000970305	SLIDE
PB 112	001920105	FOOT PEDAL DARK GREY
PB 112	001920305	FOOT PEDAL BLACK
PB 113	080440381	LEFT CONNECTOR SUPPORT
PB 114	000670036	SWITCH ACTIVATOR PIN
PB 115	010480009	SPRING SWITCH ACTIVATOR PIN
PB 116	020640000	MICROSWITCH
PB 117	086950009	SCREW 2.2 X 16 PACK OF 20
PB 118	020610000	CIRCUIT BOARD - 12" ONLY
PB 118	020370000	CIRCUIT BOARD - 14" ONLY
PB 119	010720316	EXHAUST FILTER
PB 120	010580016	FILTER BRUSH MOTOR
PB 121	050030080	BRUSH MOTOR R73/25V 120V 180W
PB 122	002890029	METAL SPACER
PB 123	002880029	METAL PULLEY
PB 124	010490009	NUT, PINION
PB 125	085560009	SCREW 3.9 X 16 PACK OF 20
PB 126	010790300	TIMING BELT
PB 127	080360011	TRANSMISSION LEFT SUPPORT W/ BEARING
PB 128	086160381	BRUSH PULLEY WITH METAL INSERT
PB 130	080880081	BRUSH SHAFT 12"
PB 130	080890081	BRUSH SHAFT 14"
PB 131	081730301	BRUSH 12”
PB 131	080620301	BRUSH 14"
PB 132	080370011	RIGHT BRUSH SUPPORT W/ BEARING
PB 133	000570325	BRUSH SHOE PLATE 12"
PB 133	000560325	BRUSH SHOE PLATE 14"
PB 134	010360009	SCREW M6X9
PB134A	010670014	BRASS GROMMET

PB 135	011640009	STAR WASHER
PB 136	080470181	BASE HOUSING 12” DARK GREY
PB 136	080450181	BASE HOUSING 14” DARK GREY
PB 137	000600112	BUMPER 12” DARK GREY
PB 137	000600312	BUMPER 12” BLACK
PB 137	000590112	BUMPER 14” GREY
PB 137	000590312	BUMPER 14” BLACK
PB 138	011320029	FRONT AXLE
PB 139	002260000	FRONT WHEEL RUBBER
PB 140	010430009	SPRING
PB 141	000680036	SPRING STOP PLATE
PB 142	000990305	BRUSH HEIGHT ADJUSTER
PB 143	003750104	ADJUSTING KNOB DARK GREY
PB 143	003750204	ADJUSTING KNOB LIGHT GREY
PB 144	011380009	REAR AXLE
PB 145	002270000	REAR WHEEL RUBBER
PB 146	012840009	WHEEL RETAINER CAP
PB 147	086440009	SCREW 3.5 X 19 PACK OF 20
PB 150	003710305	SWIVEL CONNECTOR 1 1/2" HF6 W/ BUTTON
PB 151	001080305	STOPCORD BRACKET
PB 152	011620307	STRAIN RELIEF
PB 153	085610009	SCREW 2.9 X 16 PACK OF 20
PB 154	021180320	CORD 2x18, 38”
PB 155	087420009	SCREW 2.9 X 9.5 PACK OF 20
PB 156	001100305	CORD CLAMP
PB 157	021000400	TERMINAL BLOCK 2 POLES
	021260000	CARBON BRUSH, BRUSH MOTOR, SET OF 2

ECO SPREADER ONLY:

PB 100	083970281	MOTOR COVER LIGHT GREY
PB 131	083110381	BRUSH 14"
PB 136	084000281	BASE HOUSING 14"

LINDHAUS USA
P.O. BOX 159
SAVAGE, MN 55378

Spare Parts List
HF6 Power Nozzle 12" with DCS

MAP NO.	PART NO.	DESCRIPTION
PB 99	085150081	THROAT COVER,w/SPRING, FELT STRIP
PB 99A	011000017	THROAT COVER FELT STRIP ONLY
PB 100	083960281	MOTOR COVER LIGHT GREY
PB 100	083960181	MOTOR COVER DARK GREY
PB 101	083950081	LENS SET RED AND GREEN
PB 102	083530380	JOINT COMPLETE HF6
PB 104	002280305	JOINT PIN SLIDE
PB 105	085590009	SCREW 3.9 X 13 PACK OF 20
PB 106	080430381	RIGHT CONNECTOR SUPPORT
PB 107	000840036	PLUNGER
PB 108	010390009	SPRING, DETENTE
PB 109	000650036	BUSHING
PB 110	085610009	SCREW 2.9 X 16 PACK OF 20
PB 111	000970305	SLIDE
PB 112	001920105	FOOT PEDAL DARK GREY
PB 112	001920305	FOOT PEDAL BLACK
PB 113	080440381	LEFT CONNECTOR SUPPORT
PB 114	000670036	SWITCH ACTIVATOR PIN
PB 115	010480009	SPRING SWITCH ACTIVATOR PIN
PB 116	020640000	MICROSWITCH
PB 117	086950009	SCREW 2.2 X 16 PACK OF 20
PB 118	020610000	CIRCUIT BOARD
PB 119	010720316	EXHAUST FILTER
PB 120	010580016	FILTER BRUSH MOTOR
PB 121	050030080	BRUSH MOTOR R73/25V 120V 180W
PB 122	002890029	METAL SPACER
PB 123	002880029	METAL PULLEY
PB 124	010490009	NUT, PINION
PB 125	085560009	SCREW 3.9 X 16 PACK OF 20
PB 126	010790300	TIMING BELT
PB 127	080360011	TRANSMISSION LEFT SUPPORT W/ BEARING
PB 128	086160381	BRUSH PULLEY WITH METAL INSERT
PB 130	080880081	BRUSH SHAFT 12"
PB 131	081730301	BRUSH 12”
PB 132	080370011	RIGHT BRUSH SUPPORT WITH BEARING
PB 133	005860333	BRUSH SHOE PLATE 12"
PB 134	087491381	ROLLER COVER CLIP PACK OF 20
PB 135	085540009	SCREW 3.5 X 9.5 TG PACK OF 20
PB 136	087560281	BASE HOUSING 12” WITH CLIPS - LIGHT GREY
PB 136	087560181	BASE HOUSING 12” WITH CLIPS - DARK GREY

PB 137	000600112	BUMPER 12” DARK GREY
PB 137	000600312	BUMPER 12” BLACK
PB 138	011320029	FRONT AXLE
PB 139	002260000	FRONT WHEEL RUBBER
PB 140	010430009	SPRING
PB 141	000680036	SPRING STOP PLATE
PB 142	000990305	BRUSH HEIGHT ADJUSTER
PB 143	003750104	ADJUSTING KNOB DARK GREY
PB 143	003750204	ADJUSTING KNOB LIGHT GREY
PB 144	011380009	REAR AXLE
PB 145	002270000	REAR WHEEL RUBBER
PB 146	012840009	WHEEL RETAINER CAP
PB 147	086440009	SCREW 3.5 X 19 PACK OF 20
PB 150	003710305	SWIVEL CONNECTOR 1 1/2" HF6 W/ BUTTON
PB 151	001080305	STOPCORD BRACKET
PB 152	011620307	STRAIN RELIEF
PB 153	085610009	SCREW 2.9 X 16 PACK OF 20
PB 154	021180320	CORD 2x18, 38”
PB 155	087420009	SCREW 2.9 X 9.5 PACK OF 20
PB 156	001100305	CORD CLAMP
PB 157	021000400	TERMINAL BLOCK 2 POLES
	021260000	CARBON BRUSH, BRUSH MOTOR, SET OF 2
	003243001	DCS CONVERTER